

My Reveal Project

For help with questions about the specifications provided for your configuration, call us toll-free between 8am-5pm CST at (866) 689-9653.

Disclaimer: We strongly recommend saving all Reveal configurations to "My Sub-Zero Account" to ensure the most up-to-date specification information is reflected on your shared documents as product specifications are subject to change without notice. Otherwise, we suggest that this configuration be recreated prior to finalizing your cabinetry enclosures. The reveal listed in this configuration is the minimum reveal suggested by the manufacturer. After extensive research, Sub-Zero simplified the naming of our refrigeration product lines to be more descriptive and distinct for our consumers. Built-In is now referred to as Classic, and Integrated is now referred to as Designer. Model numbers currently remain unchanged.

CL4250SD/O: Opening and Panel Specs, Standard Installation, Custom Panels, 84" Finished Height (Typical)

Specifications:

Specifications Summary
Front View
Side View
Top View
Top View Detail
Panel Specifications
Panel Planning Notes
Templates
Ice And Water Dispenser
Additional Requirements



CL4250SD/O
42" Classic Side-by-Side Refrigerator/Freezer with Dispenser - Panel Ready

Notes : Additional accessories are available for this installation. Please ask your local retailer for more information.

Specifications Summary

Single Model: CL4250SD/O

MODEL	OVERALL DIMENSIONS	WEIGHT	OPENING DIMENSIONS
CL4250SD/O - Model Detail **CAD Libraries:** 3D Studio Max (3DS) 3D Studio Max (MAX) 2D AutoCad (DWG) Wavefront 3D (OBJ) 3D AutoCad (DWG) Revit Files (RFA) SketchUp (SKP) AutoCad (DXF) ArchiCad (GSM) **User Guides:** QR SHEET Subzero Design Guide	1067 mm W 2134 mm H 610 mm D	632 lbs	1054 mm W 2127 mm H 610 mm D

Front View

Single Model: CL4250SD/O

CL4250SD/O

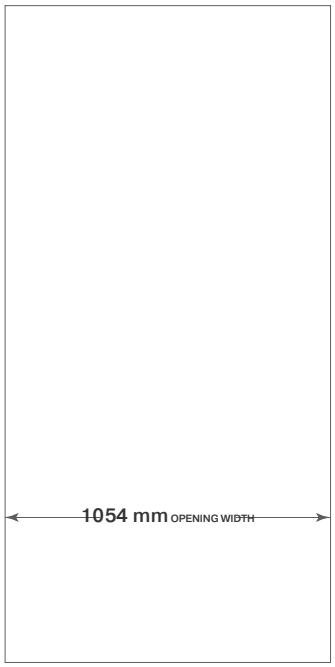

Top View

Single Model: CL4250SD/O

CL4250SD/O

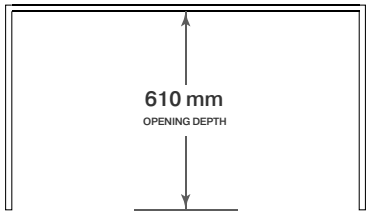

Top View Detail

Single Model: CL4250SD/O

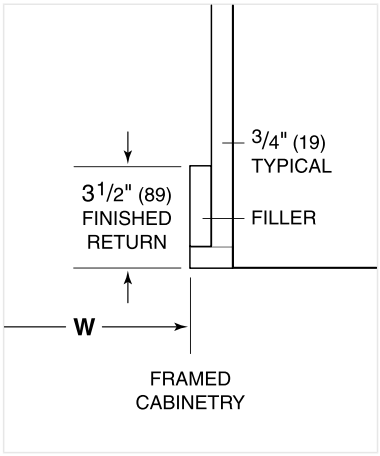

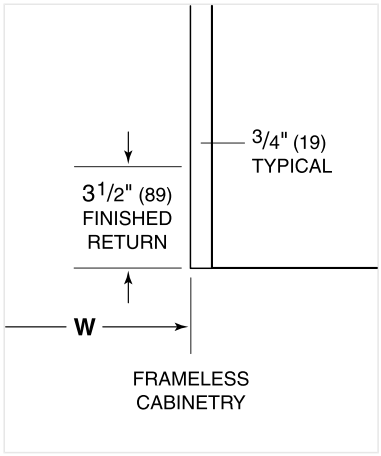

Side View

Single Model: CL4250SD/O

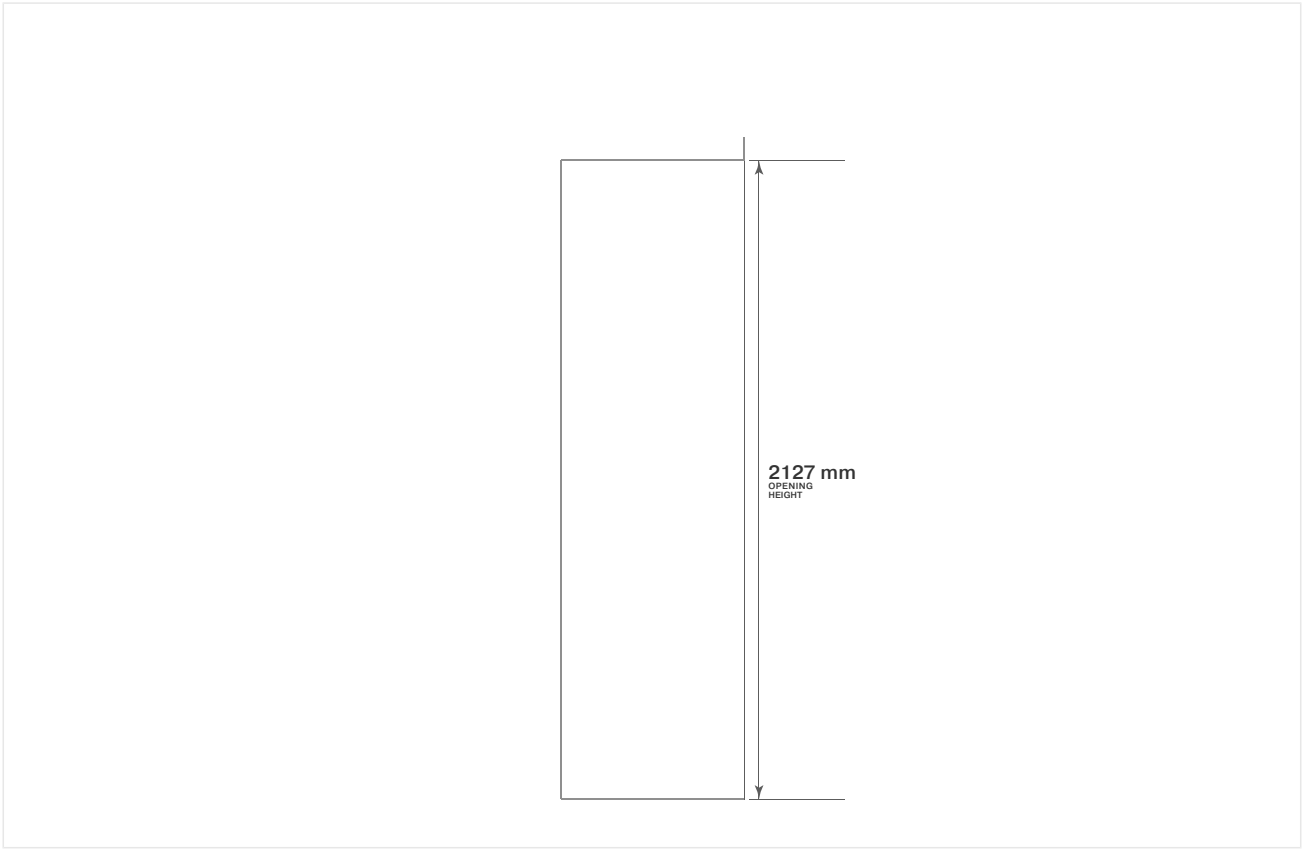

Panel Specifications

Single Model: CL4250SD/O

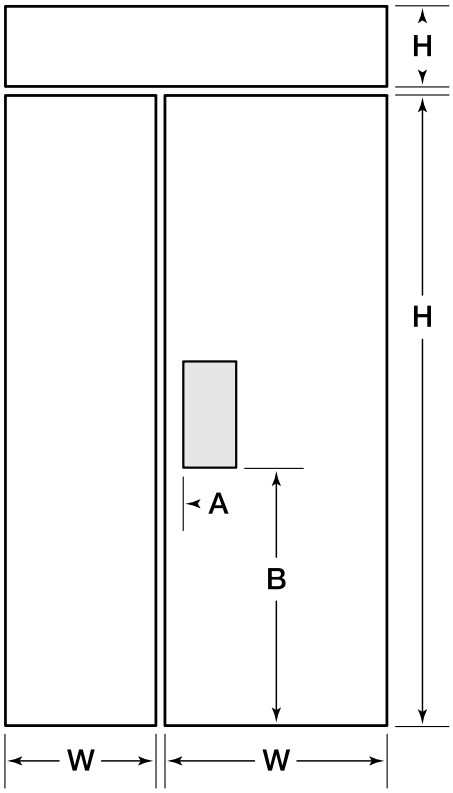

PANEL	FRONT	SPACER	BACKER	MAX WEIGHT
Refrigerator	637 mm W 1810 mm H	614 mm W 1789 mm H	630 mm W 1805 mm H	50 lbs
Freezer	424 mm W 1810 mm H	402 mm W 1789 mm H	418 mm W 1805 mm H	50 lbs
Grille	1067 mm W 197 mm H	1045 mm W 173 mm H	1060 mm W 189 mm H	13 lbs

DISPENSER	SIZE	LOCATION
Cut-Out	162 mm W 330 mm H	54 mm A 832 mm B

Panel Planning Notes

Single Model: CL4250SD/O

Overlay panels are typically created by combining a 3/4" (19) custom panel, a .10" (3) spacer panel and a 1/4" (6) backer panel.

Minimum Panel Thickness

19 mm

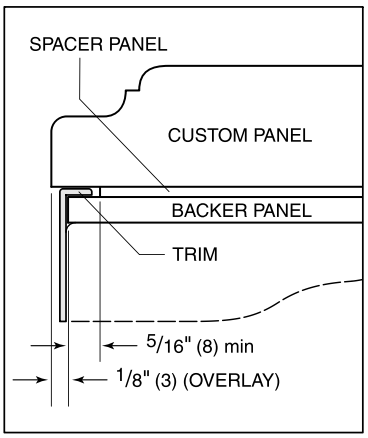

Panel assembly (cross section).

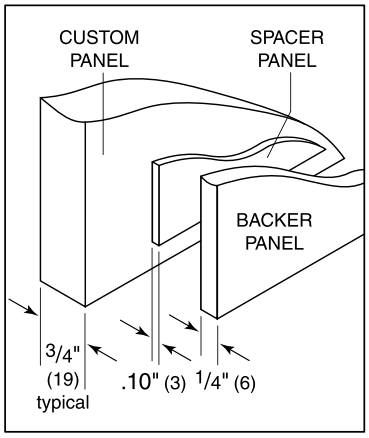

Panel assembly (rear view).

Standard Handle Lengths (Optional)

HANDLE	TUBULAR	PRO
CL4250SD/O Door	1543 mm	1516 mm

Ice And Water Dispenser

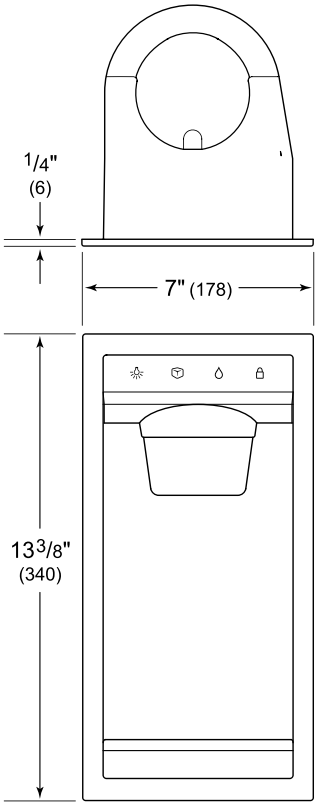

Ice And Water Dispenser

The refrigerator door panel must include a cutout to accommodate the external dispenser. The bezel will accommodate a minimum 3/4" (19) thick panel. Panels thicker than 3/4" (19) must be routed to 3/4" (22) in the dispenser area (1 1/8" (29) including the backer and spacer panels).

Templates

Single Model: CL4250SD/O

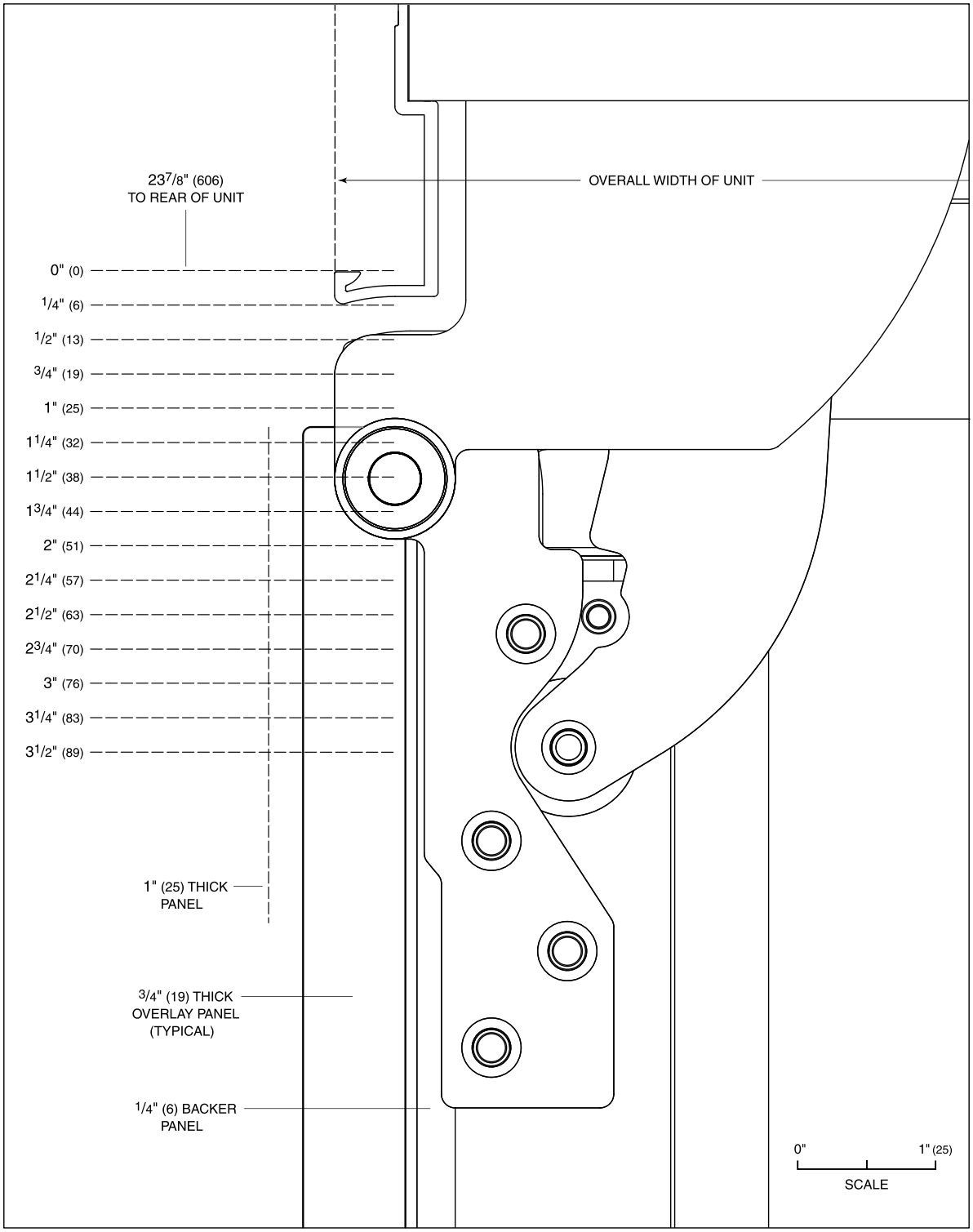

Overlay application—90° door opening (top view).

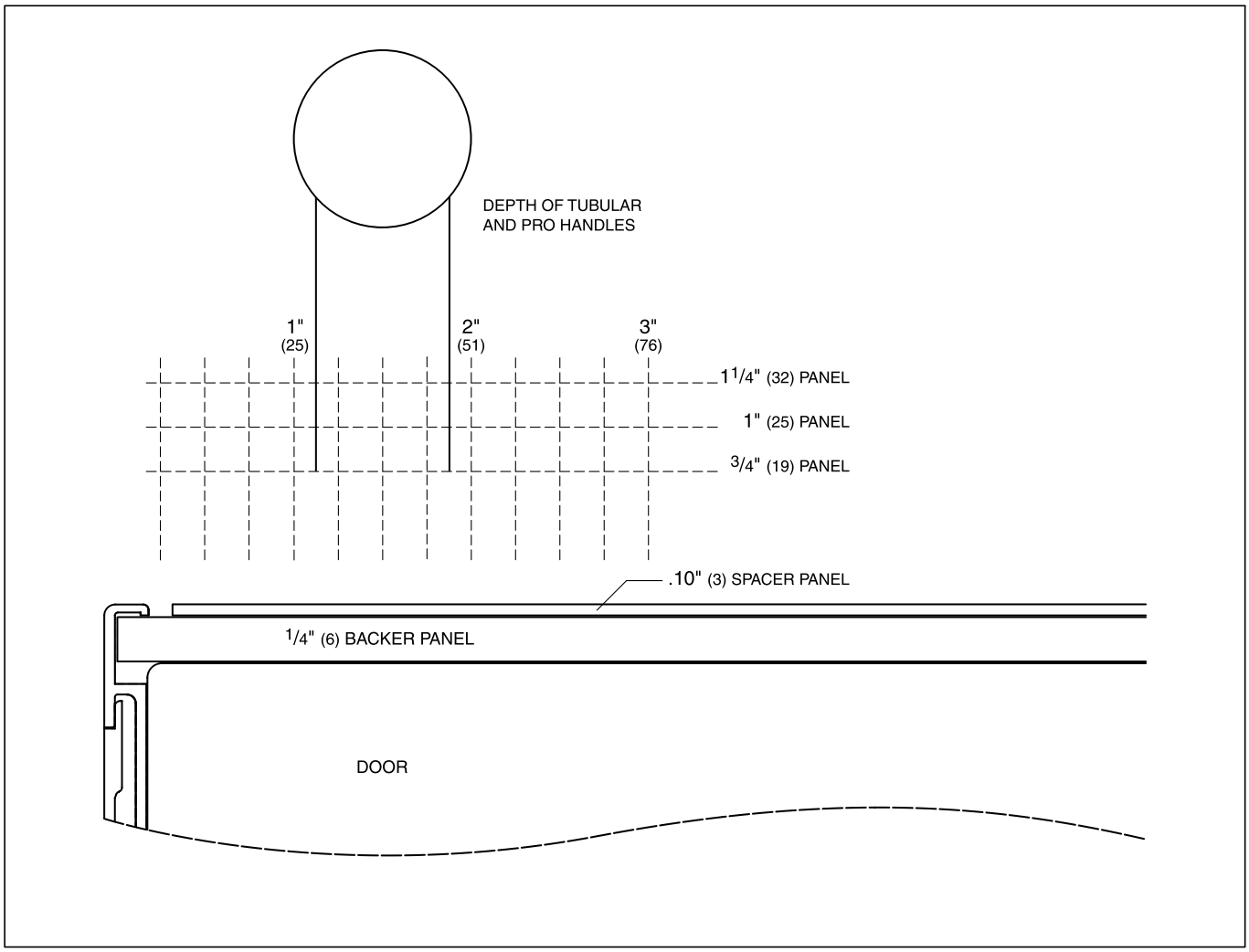

Overlay and flush inset panel thickness.

Overall Dimensions

Single Model: CL4250SD/O

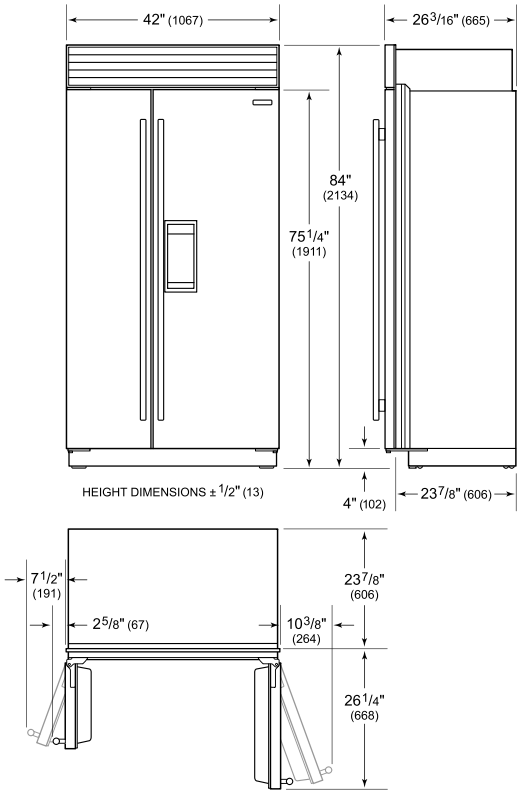

Electrical

Single Model: CL4250SD/O

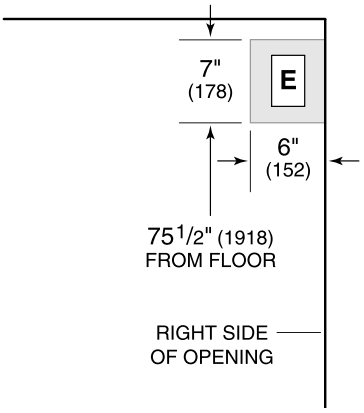

Electrical Supply	grounded, 115 VAC, 60 Hz
Electrical Service	15 amp dedicated circuit
Receptacle	3-prong grounding-type

WARNING

Installation must comply with all applicable electrical codes.

A separate circuit, servicing only this appliance is required. A ground fault circuit interrupter (GFCI) is not recommended and may cause interruption of operation. Installation must comply with all applicable electrical codes.

Plumbing

Single Model: CL4250SD/O

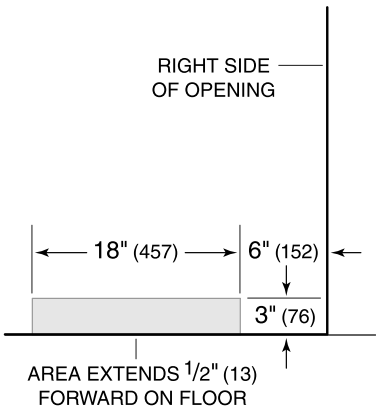

Water Supply	1/4" OD copper, braided stainless steel or PEX tubing
Pressure	35–120 psi
Excess Line For Connection	36"

The water supply line should be connected to the house supply with an easily accessible shut-off valve. Do not use self-piercing valves. The water supply line must not interfere with installation of the anti-tip brackets. A reverse osmosis system can be used provided there is constant water pressure of 35–120 psi (2.4–8.3 bar) supplied to the unit at all times. A copper line is not recommended for this application. Installation must comply with all applicable plumbing codes.